MURR ELEKTRONIK
stay connected

MIRO 6.2 pluggable compl. Module Optocoupler

IN: 24 VDC - OUT: 24 VDC / 6 A

Art.No.: 3000-32512-2100040
Weight: 0.026
Country of origin: CZ
Model designation: MIRO 6,2-Opto-Komplettmodul 24/24VDC 6A

Transistor 6 A
24 V DC
Spring clamp terminals
Complete module

Link to Product

Illustration

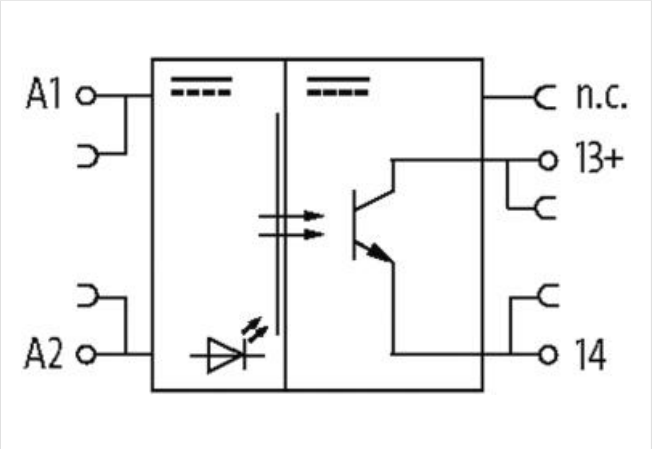

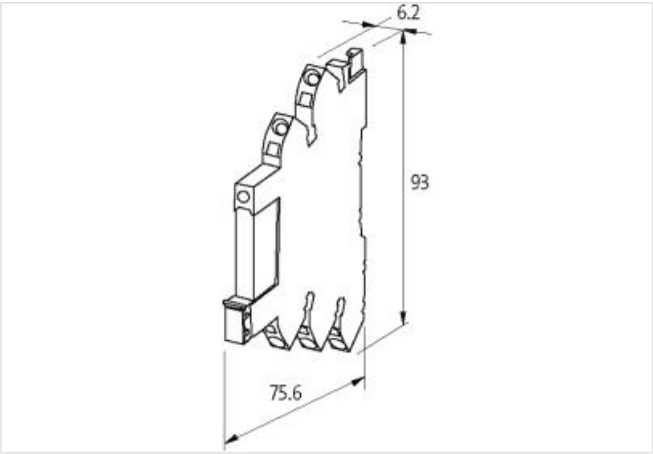

Product may differ from Image

Commercial data

ECLASS-6.0	27371604
ECLASS-6.1	27371604
ECLASS-7.0	27371604

The information in this Product-PDF has been compiled with the utmost care.
Liability for the correctness completeness and topicality of the information is restricted to gross negligence. Version: 2025-06-11

ECLASS-8.0	27371604
ECLASS-9.0	27371604
ECLASS-10.1	27371604
ECLASS-11.1	27371604
ECLASS-12.0	27371604
ETIM-5.0	EC001504
ETIM-6.0	EC001504
ETIM-7.0	EC001504
ETIM-8.0	EC001504
customs tariff number	85365005
customs tariff number	85365005
EAN	4048879532747
EAN	4048879532747
Packaging unit	1
Packaging unit	1
Electrical data | Input	
Input voltage DC	24 V
Input voltage DC min.	18 V
Input voltage DC max.	30 V
Input current	9 mA
Electrical data | Output	
Switch off delay max.	31 µs
Forward voltage max.	240 mV
Switch on delay max.	15 µs
Switching frequency inductive max.	50 Hz
Switching frequency ohmic max.	500 Hz
Voltage switching DC min.	3 V
Switching voltage DC max.	30 V
Switching current min.	10 mA
Switching current max.	6 A
Diagnostics	
Status indication LED	yellow
Device protection | Electrical	
Degree of protection (EN IEC 60529)	IP20
Rated insulation voltage	50 V
Rated surge voltage	2,5 kV
Mechanical data | Mounting data	
Mounting method	inserted
Height	93 mm
Width	6,2 mm
Depth	75,6 mm
Environmental characteristics | Climatic	
Operating temperature min.	-25 °C
Operating temperature max.	50 °C

The information in this Product-PDF has been compiled with the utmost care.
Liability for the correctness completeness and topicality of the information is restricted to gross negligence. Version: 2025-06-11