MURR ELEKTRONIK
stay connected

M8 female 0° A-cod. IDC

3-pol., 0,25 - 0,5mm², 2,5 - 5mm

Art.No.: 7000-08365-0000000
Weight: 0.007
Country of origin: DE
Model designation: MSFL0-AC-R IDC 0,25-0,5mm²

IDC terminals
Female straight
M8, 3-pole
Connection cross section: 0.25...0.5 mm²

Link to Product

Illustration

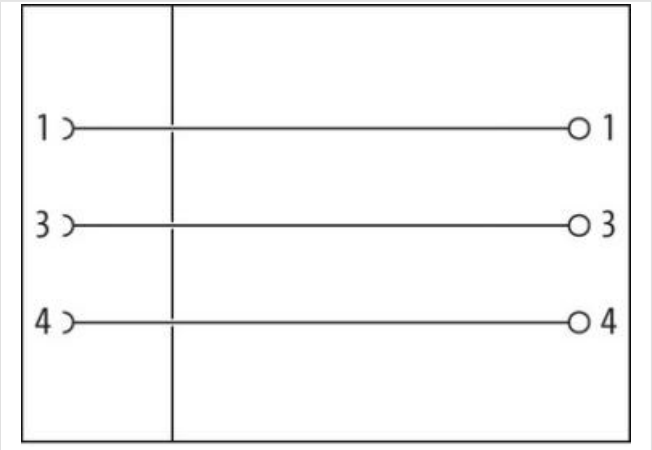

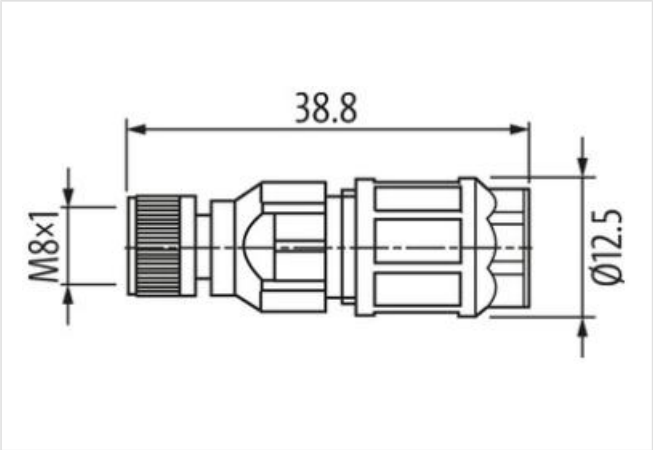

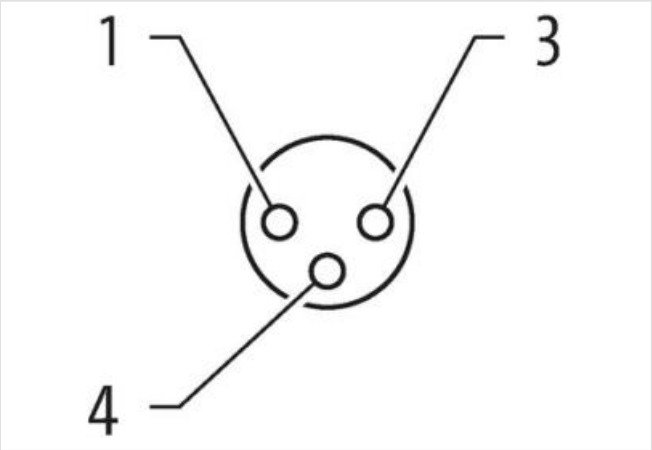

Product may differ from Image

Side 1

Mounting method	inserted, screwed
Family construction form	M8
Material contact	Copper alloy

The information in this Product-PDF has been compiled with the utmost care.
Liability for the correctness completeness and topicality of the information is restricted to gross negligence. Version: 2025-06-16

Material	PA
No. of poles	3
Degree of protection (EN IEC 60529)	IP65, IP67
Commercial data	
ECLASS-6.0	27279221
ECLASS-6.1	27260702
ECLASS-7.0	27440102
ECLASS-8.0	27440102
ECLASS-9.0	27440116
ECLASS-10.1	27440102
ECLASS-11.1	27440102
ECLASS-12.0	27440116
ETIM-5.0	EC002635
customs tariff number	85366990
customs tariff number	85366990
EAN	4048879784801
EAN	4048879784801
Packaging unit	1
Packaging unit	1
Electrical data | Supply	
Operating voltage AC max.	48 V
Operating voltage DC max.	60 V
Current operating per contact max.	4 A
Installation	
Connection cross section min.	0,25 mm²
Connection cross section max.	0,5 mm²
Installation | Connection	
Wire insulation diameter min.	1,1 mm
Wire insulation diameter max.	1,55 mm
Connection	Cut clamps IDC
Mounting set	M8 x 1
Mating cycles min.	100
Device protection | Electrical	
Additional condition protection degree	inserted, screwed
Pollution Degree	3
Rated surge voltage	0,8 kV
Insulation resistance min.	100 MΩ
Material group (IEC 60664-1)	III
Overvoltage category (EN 60950-1)	II
Mechanical data | Material data	
Coating contact	gold plated
Coating locking	Nickeled
Material gasket	NBR
Material contact carrier	TPU
Locking material	Zinc die-casting
Mechanical data | Mounting data	
Mounting method	Hexagonal screw, Hexagonal nut
Clamping range min.	2,5 mm
Clamping range max.	5 mm
Looking techniques	Schraubgewinde
Environmental characteristics | Climatic	

The information in this Product-PDF has been compiled with the utmost care.
Liability for the correctness completeness and topicality of the information is restricted to gross negligence. Version: 2025-06-16

Operating temperature min.	-25 °C
Operating temperature max.	80 °C
Important installation notes	
Note on strain relief	Protect the connectors by suitable measures from mechanical loads, e.g. by the usage of cable ties.
Note on bending radius	**Attention:** Observe the permissible bending radii when laying cables, as the IP protection class can be endangered by excessive bending forces.
Conformity	
Product standard	DIN EN 61076-2-114 (M8)

The information in this Product-PDF has been compiled with the utmost care.
Liability for the correctness completeness and topicality of the information is restricted to gross negligence. Version: 2025-06-16