stay connected

RM-31/24V DC KL.BZ.N.EN OUTPUT RELAY

IN: 24 VDC - OUT: 250 VAC/DC / 5 A

3 relays; each 1 NO/NC contact
8 A
24 V DC
Screw terminals

Link to Product

Illustration

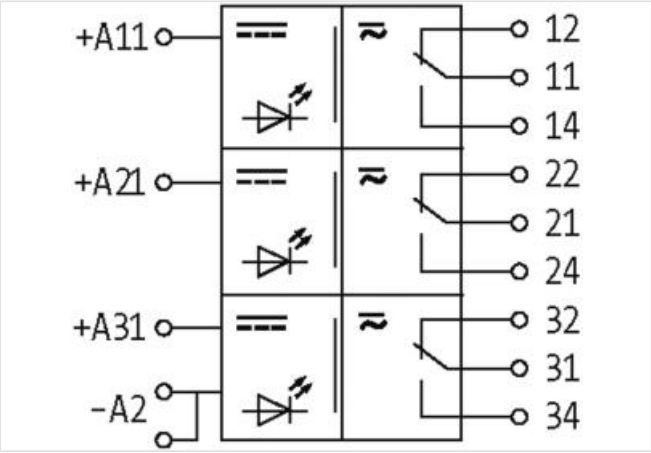

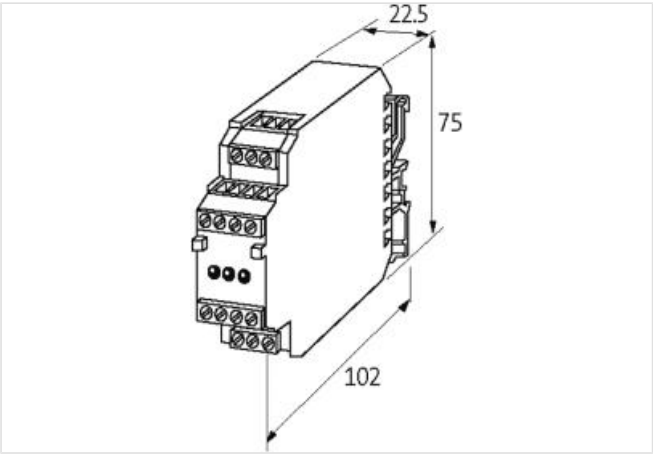

Product may differ from Image

Commercial data

ECLASS-6.0	27371001
ECLASS-6.1	27371601
ECLASS-7.0	27371601
ECLASS-8.0	27371601
ECLASS-9.0	27371601
ECLASS-10.1	27371601

The information in this Product-PDF has been compiled with the utmost care.
Liability for the correctness completeness and topicality of the information is restricted to gross negligence. Version: 2024-04-25

ECLASS-11.1	27371601
ECLASS-12.0	27371601
ETIM-5.0	EC001437
customs tariff number	85364900
GTIN	4048879027656
Packaging unit	1
Electrical data | Input	
Input voltage DC	24 V
Input voltage DC min.	19,2 V
Input voltage DC max.	30 V
Input current	16 mA
Electrical data | Output	
Utilization category AC-15 (EN IEC 60947-5-1)	3 A @ 24 V, 3 A @ 110 V, 3 A @ 230 V
Utilization category DC-13 (EN IEC 60947-5-1)	1,5 A @ 24 V, 0,3 A @ 110 V, 0,15 A @ 230 V
Additional condition switching frequency	with load
Switching frequency max.	0,1 Hz
Power rating AC max.	1250 VA
Power rating DC max.	240 W
Switching voltage AC max.	250 V
Switching voltage DC max.	250 V
Switching current DC	100 mA
Switching current max.	8 A
Switching capacity AC-12 (EN IEC 60947-5-1)	8 A (24/110/230 V AC)
Diagnostics	
Status indication LED	red
Device protection	
Condition lifetime	load-dependent
Device protection | Electrical	
Rated surge voltage	4 kV
Electrical lifetime	20000000 Cycles
Device protection | Mechanical	
Mechanical endurance	20000000 Cycles
Mechanical data	
Drop-out time max.	10 ms
Response time max.	10 ms
Bounce time max.	2 ms
Mechanical data | Material data	
Material contact	Ag Sn O2
Mechanical data | Mounting data	
Mounting method	geschnappt
Suitable for mounting type	Mounting rail TH35, G32, (EN 60715)
Height	75 mm
Width	22,5 mm
Depth	102 mm
Environmental characteristics | Climatic	
Operating temperature min.	-20 °C
Operating temperature max.	50 °C
Connection type 4	
Connection	Screw terminals SK
Family construction form	terminal

The information in this Product-PDF has been compiled with the utmost care.
Liability for the correctness completeness and topicality of the information is restricted to gross negligence. Version: 2024-04-25

Gender	female
Color contact carrier	green
No. of poles	3
PIN 1	- A 2
PIN 2	22
PIN 3	32
Connection	Screw terminals SK
Family construction form	terminal
Gender	female
Color contact carrier	green
No. of poles	3
PIN 1	12
PIN 2	34
PIN 3	31
Connection	Screw terminals SK
Family construction form	terminal
Gender	female
Color contact carrier	green
No. of poles	4
PIN 1	- A 2
PIN 2	+ A 31
PIN 3	+ A 21
PIN 4	+ A 11
Connection	Screw terminals SK
Family construction form	terminal
Gender	female
Color contact carrier	green
No. of poles	4
PIN 1	14
PIN 2	11
PIN 3	24
PIN 4	21

The information in this Product-PDF has been compiled with the utmost care.
Liability for the correctness completeness and topicality of the information is restricted to gross negligence. Version: 2024-04-25