7/8" male 0° / 7/8" female 0°

PUR 5x1.5 gy UL/CSA+drag ch. 5m

Male straight – female straight
7/8" – 7/8", 5-pole
Power cable
Further cable lengths on request.
Plastic housings with good resistance against chemicals and oils.
The resistance to aggressive media should be individually tested for your application. Further details on request.

Link to Product

Illustration

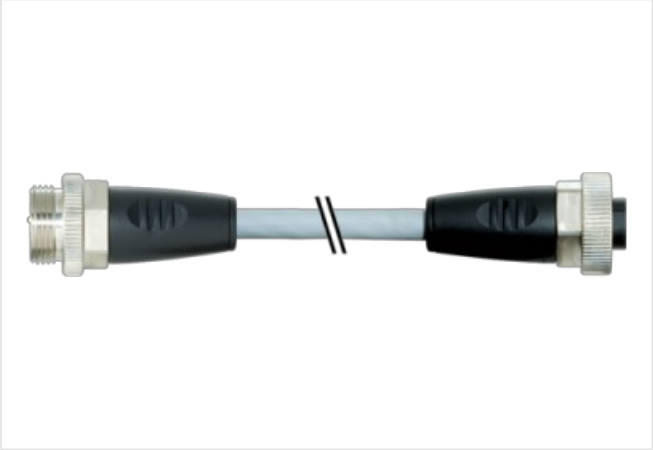

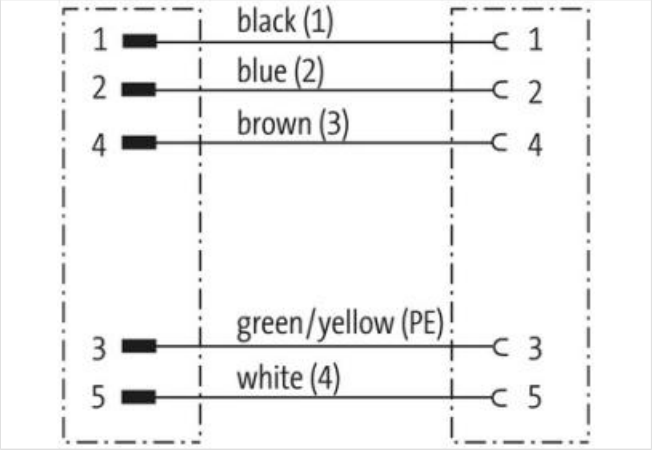

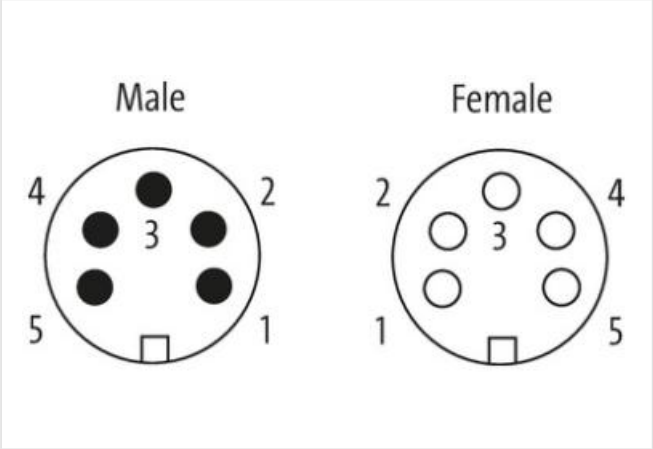

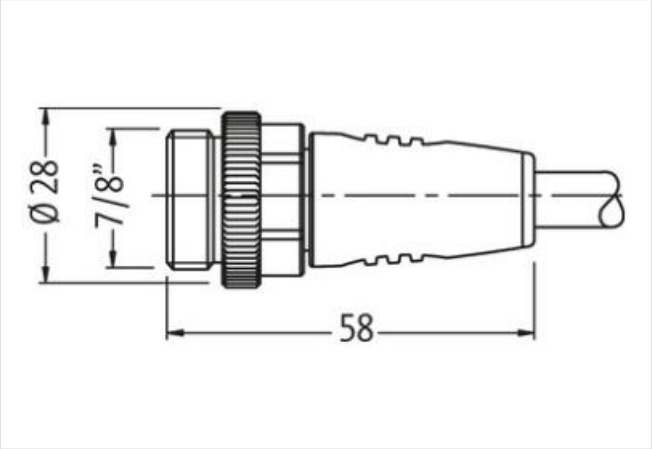

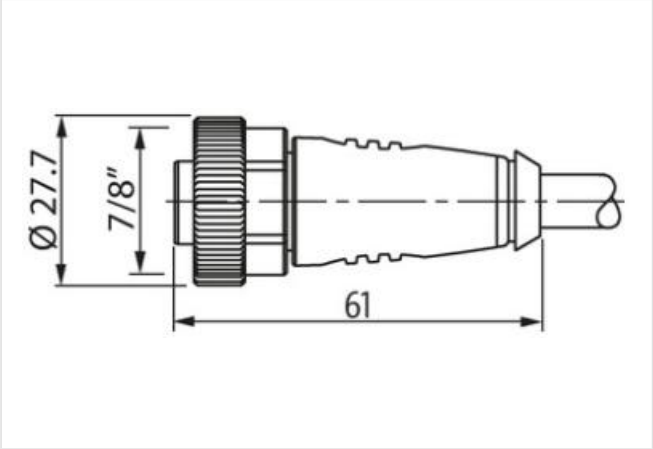

Product may differ from Image

Cable length	5 m
Side 1	
Tightening torque	1,5 Nm
Thread	7/8"
Side 2	
Tightening torque	1,5 Nm
Thread	7/8"
Commercial data	
ECLASS-6.0	27279218
ECLASS-6.1	27279218
ECLASS-7.0	27279218
ECLASS-8.0	27279218
ECLASS-9.0	27060327
ECLASS-10.1	27060311
ECLASS-11.1	27060311
ECLASS-12.0	27060327
ETIM-5.0	EC001855
customs tariff number	85444290
GTIN	4048879138659
Packaging unit	1
Electrical data | Supply	
Current operating per contact max.	12 A
Current phase - neutral	230 V
Current phase - phase	400 V
Device protection | Electrical	
Degree of protection (EN IEC 60529)	IP67
Additional condition protection degree	inserted, screwed
Rated surge voltage	3 kV
Mechanical data | Mounting data	
Mounting method	inserted, screwed, Shaking protection
Environmental characteristics | Climatic	

MURR ELEKTRONIK
stay connected

Operating temperature min.	-25 °C
Operating temperature max.	85 °C
Additional condition temperature range	depending on cable quality
Installation | Cable	
Cable identification	961
Cable Type	3
Printing color of wire insulation	black (white isolation), white (isolation blue), white (isolation brown), white (isolation black)
Jacket Color	gray
Type of Certificate	cURus
Amount stranding	1
Stranding	5 wires around Filler twisted
Filler	yes
wire arrangement	green-yellow, blue 2, black 1, white 4, brown 3
No. of bending cycles (C-track)	5 Mio. @ 25 °C
Cable weigth	129,8 g/m
Material jacket	PUR
Shore hardness jacket	90 ± 5 Shore A
Freedom from ingredients (jacket)	lead-free, cadmium-free, CFC-free, halogen-free, silicone-free
Outer-diameter (jacket)	8 mm
Tolerance outer diameter (sheath)	± 5 %
Material wire insulation	PP
Amount wires	5
Outer diameter insulation	2,3 mm
Outer diameter tolerance core insulation	± 5 %
Shore hardness wire insulation	60 ± 5 Shore D
Ingredient freeness wire insulation	lead-free, cadmium-free, CFC-free, halogen-free, silicone-free
Printing color of wire insulation	black (white isolation), white (isolation blue), white (isolation brown), white (isolation black)
Amount strands (wire)	84
Diameter of single wires	0,15 mm
Conductor crosssection (wire)	1,5 mm²
Material conductor wire	Stranded copper wire, bare
Conductor type (wire)	strand class 6
Traversing distance (C-track)	5 m @ 25 °C
Current load capacity (standard)	to DIN VDE 0298-4
Current load capacity min. wire	13,5 A
Electrical resistance line constant wire	13,3 Ω/km @ 20 °C
Nominal voltage power AC max.	1000 V
Power frequency withstand voltage power (wire - jacket)	10 kV @ 60 s
AC withstand voltage power (wire - wire)	10 kV @ 60 s
Min. operating temperature (static)	-50 °C
Max. operating temperature (fixed)	80 °C / 90 °C @ 10000 h Operation
Operating temperature min. (dynamic)	-25 °C
Operating temperature max. (dynamic)	80 °C / 90 °C @ 10000 h Operation
Flame resistance	UL 1581 § 1100 FT2 | IEC 60332-2-2 | UL 1581 § 1090
chemical resistance	Good, application-related testing
Gasoline resistance	Good, application-related testing
Oil resistance	DIN EN 60811-404 | Good, application-related testing
Bending radius (fixed)	7,5 x Outer diameter
Bending radius (dynamic)	10 x Outer diameter
No. of torsion cycles	2 Mio.
Torsion speed	35 cycles/min
Torsion stress	± 180 °/m