MURR ELEKTRONIK
stay connected

B6 female 6-pole, screw t., 500 V, 16 A

B6
Female
6-pole
Screw terminal
Technical data will be only guaranteed with Murrelektronik components.

Link to Product

Illustration

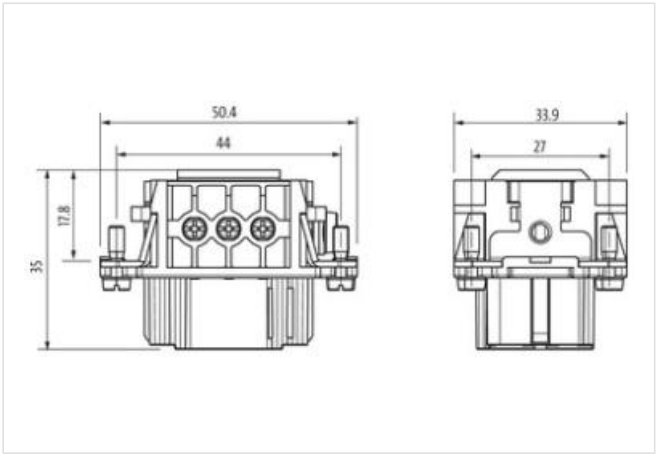

Product may differ from Image

Commercial data

ECLASS-6.0	27143424
ECLASS-6.1	27261204
ECLASS-7.0	27440205
ECLASS-8.0	27440205
ECLASS-9.0	27440205
ECLASS-10.1	27440205
ECLASS-11.1	27440205
ECLASS-12.0	27440205
ETIM-5.0	EC000438
customs tariff number	85366990
GTIN	4048879637657
Packaging unit	1

Electrical data | Supply

Operating voltage AC	500 V
Operating voltage DC	500 V
Operating current	16 A

Installation

Connection cross section min.	0,5 mm²
Connection cross section max.	2,5 mm²
AWG number min.	20
AWG number max.	14

The information in this Product-PDF has been compiled with the utmost care.
Liability for the correctness completeness and topicality of the information is restricted to gross negligence. Version: 2024-04-25

MURR ELEKTRONIK
stay connected

Installation | Connection	
Stripping length	7,5 mm
Wire insulation diameter min.	3,6 mm
Connection	Screw terminals SK
Tightening torque clamping screw	0,5 Nm
Gender	female
Mating cycles min.	500
Installation | Pin assignment	
No. of poles	6 + PE
Device protection | Electrical	
Pollution Degree	3
Rated surge voltage	6 kV
Insulation resistance min.	100 MΩ
Material group (IEC 60664-1)	IIIb
Overvoltage category (EN 60664-1)	III
Overvoltage category (EN 60950-1)	III
Mechanical data	
Holding force min.	150 N
Pulling force max.	35 N
Mechanical data | Material data	
Coating contact	silver-plated
Combustibility class (UL94)	V-0
Material contact	Brass
Material contact carrier	PA GF
Mechanical data | Mounting data	
Size	B6
Height	35 mm
Width	33,9 mm
Depth	50,4 mm
Environmental characteristics | Climatic	
Operating temperature min.	-40 °C
Operating temperature max.	125 °C
Climatic category (EN IEC 60068-1)	40/125/10

The information in this Product-PDF has been compiled with the utmost care.
Liability for the correctness completeness and topicality of the information is restricted to gross negligence. Version: 2024-04-25